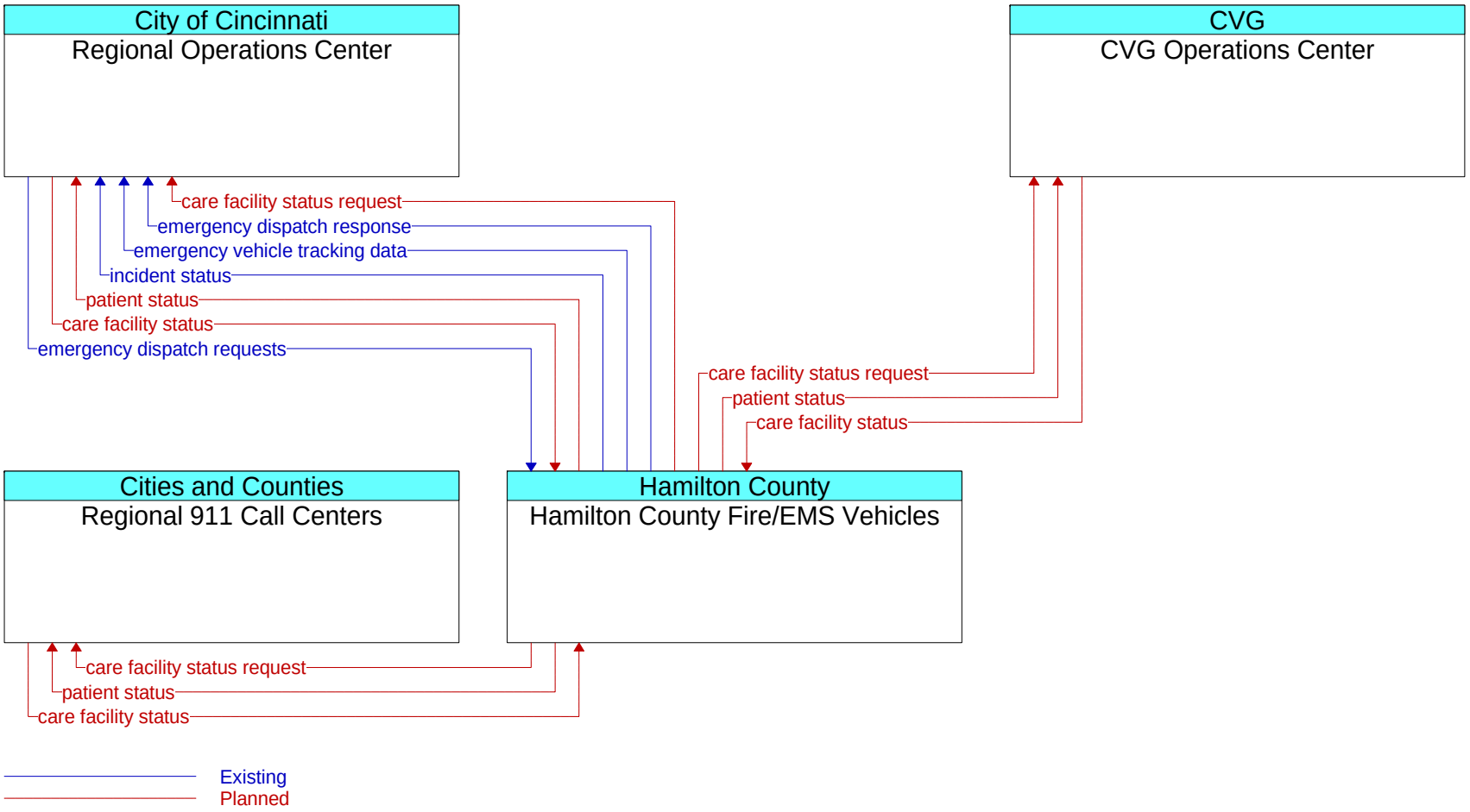
City of Cincinnati
Regional Operations Center
CVG
CVG Operations Center
care facility status request
emergency dispatch response
emergency vehicle tracking data
incident status
patient status
care facility status
emergency dispatch requests
care facility status request
patient status
care facility status
Cities and Counties
Regional 911 Call Centers
Hamilton County
Hamilton County Fire/EMS Vehicles
care facility status request
patient status
care facility status
Existing
Planned