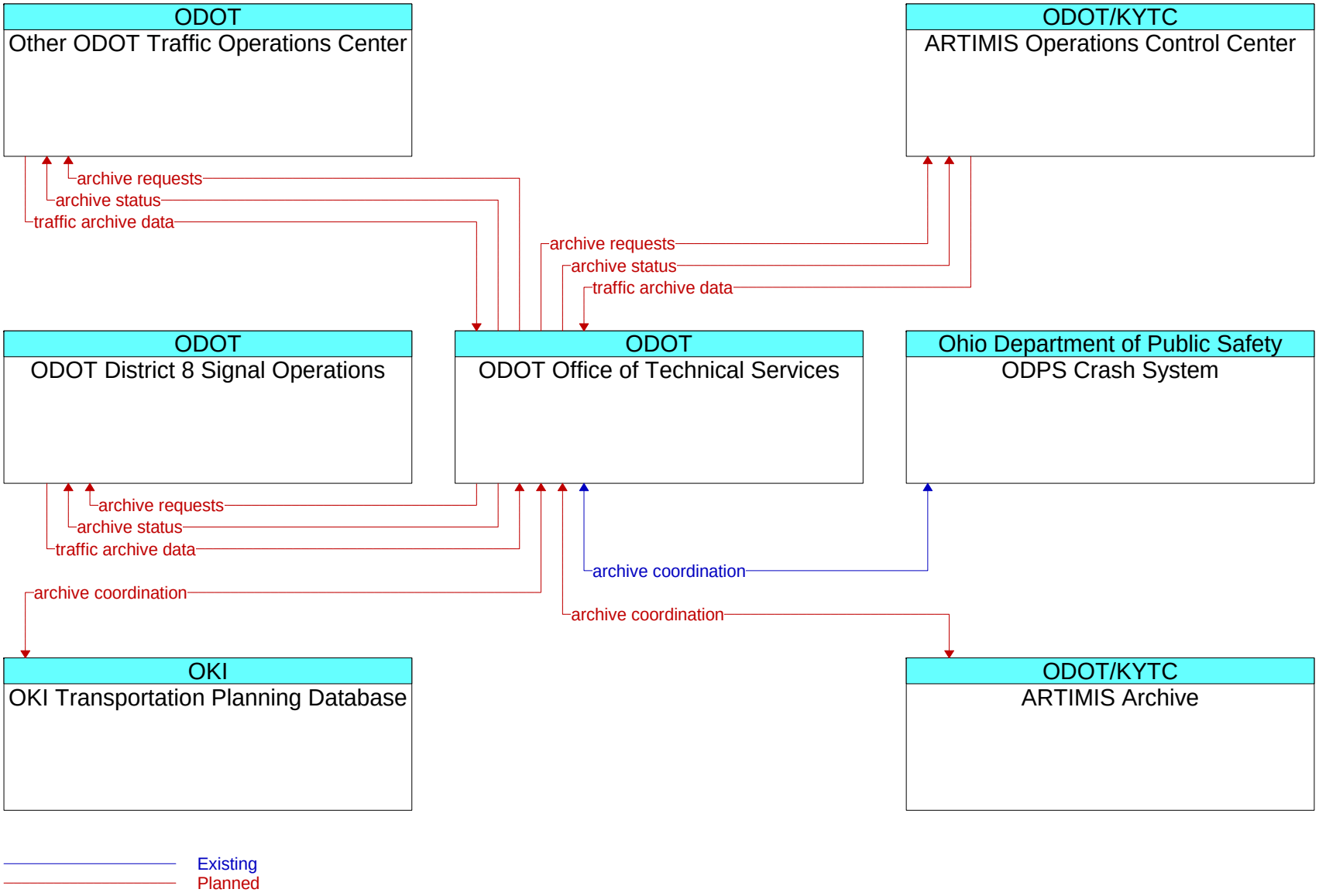
ODOT
Other ODOT Traffic Operations Center
ODOT/KYTC
ARTIMIS Operations Control Center
archive requests
archive status
traffic archive data
archive requests
archive status
traffic archive data
ODOT
ODOT District 8 Signal Operations
ODOT
ODOT Office of Technical Services
Ohio Department of Public Safety
ODPS Crash System
archive requests
archive status
traffic archive data
archive coordination
archive coordination
archive coordination
OKI
OKI Transportation Planning Database
ODOT/KYTC
ARTIMIS Archive
Existing
Planned