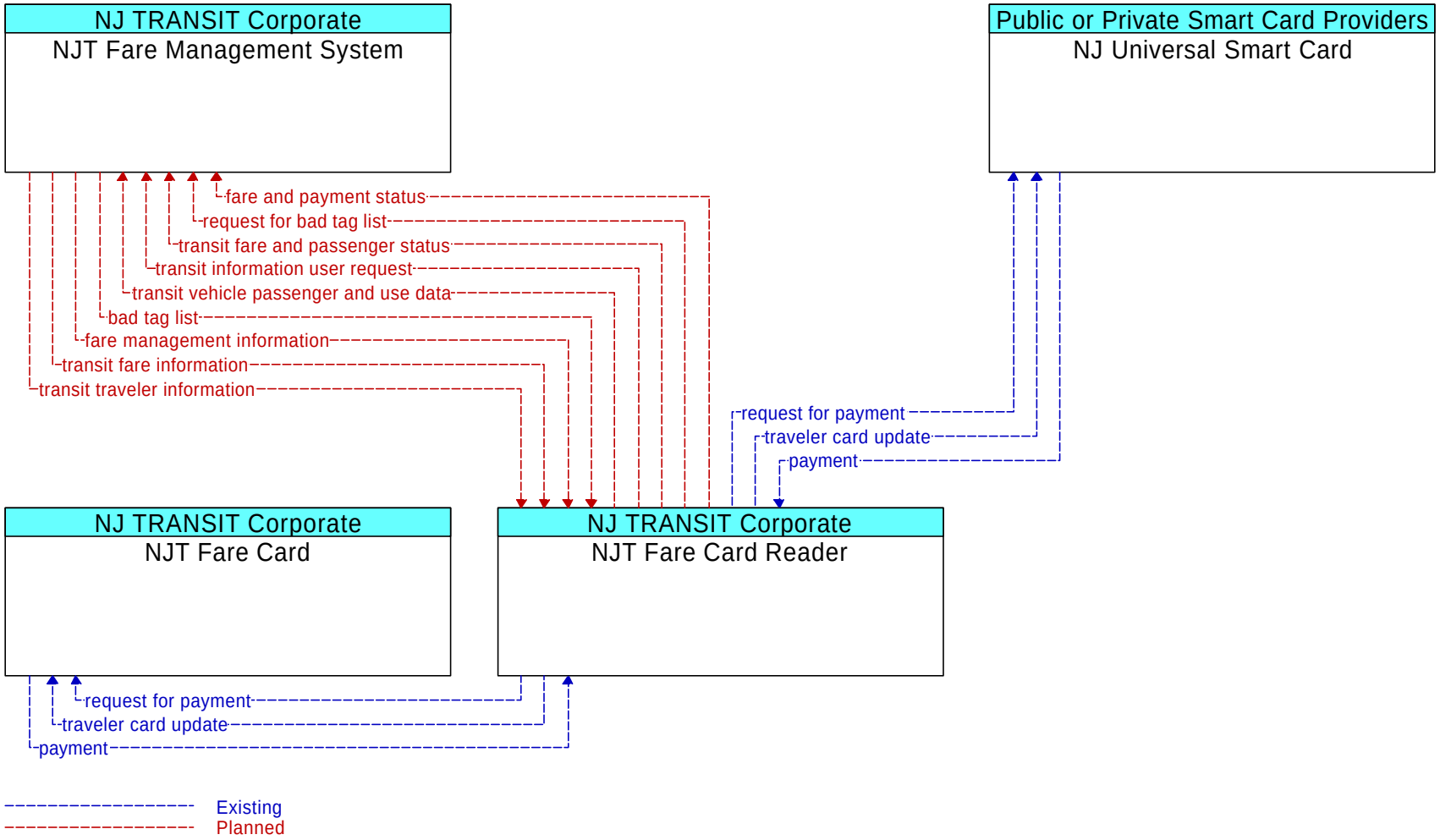
NJ TRANSIT Corporate
NJT Fare Management System
Public or Private Smart Card Providers
NJ Universal Smart Card
fare and payment status
request for bad tag list
transit fare and passenger status
transit information user request
transit vehicle passenger and use data
bad tag list
fare management information
transit fare information
transit traveler information
request for payment
traveler card update
payment
NJ TRANSIT Corporate
NJT Fare Card
NJ TRANSIT Corporate
NJT Fare Card Reader
request for payment
traveler card update
payment
Existing
Planned