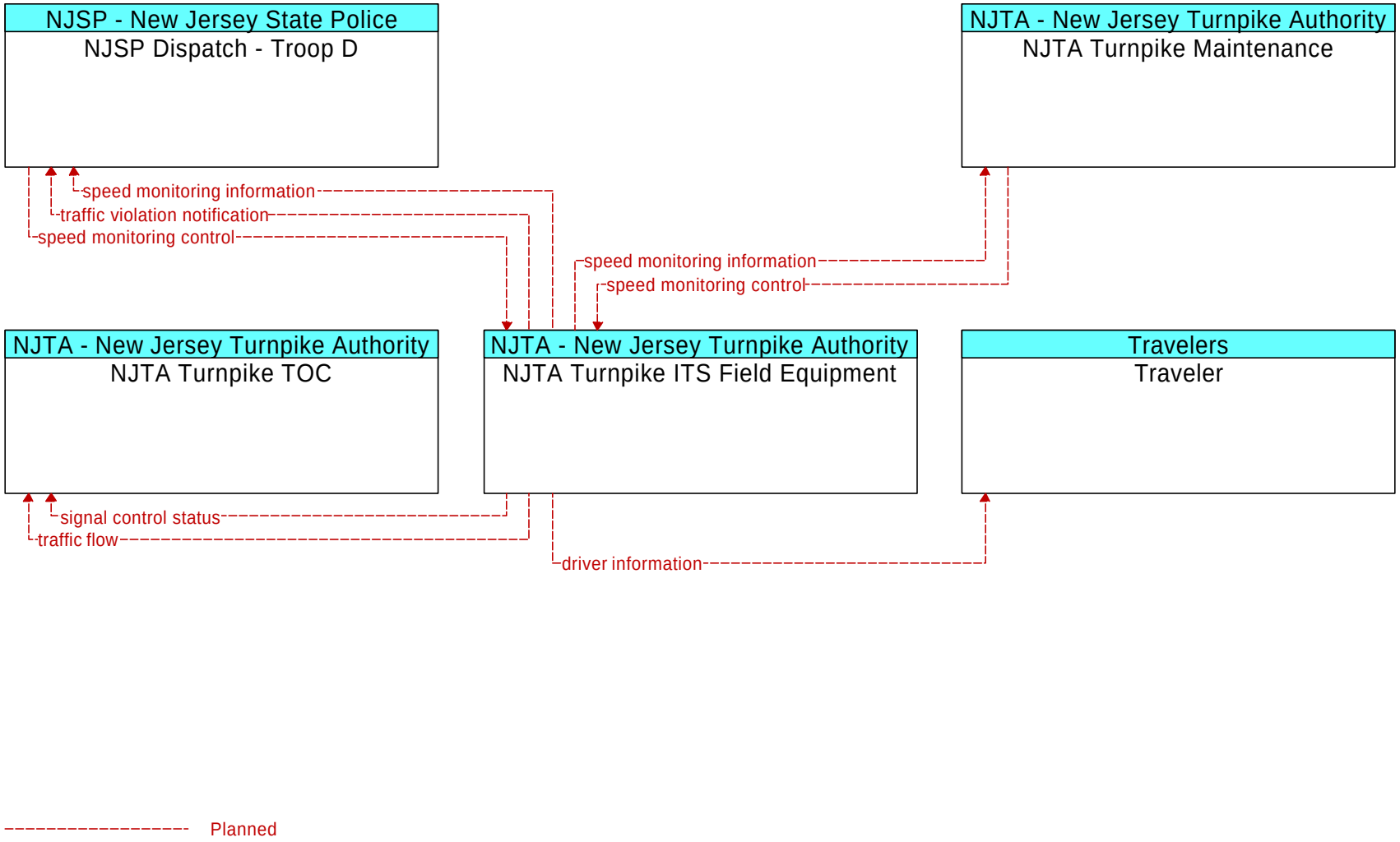
NJSP - New Jersey State Police
NJSP Dispatch - Troop D
NJTA - New Jersey Turnpike Authority
NJTA Turnpike Maintenance
speed monitoring information
traffic violation notification
speed monitoring control
speed monitoring information
speed monitoring control
NJTA - New Jersey Turnpike Authority
NJTA Turnpike TOC
NJTA - New Jersey Turnpike Authority
NJTA Turnpike ITS Field Equipment
Travelers
Traveler
signal control status
traffic flow
driver information
Planned