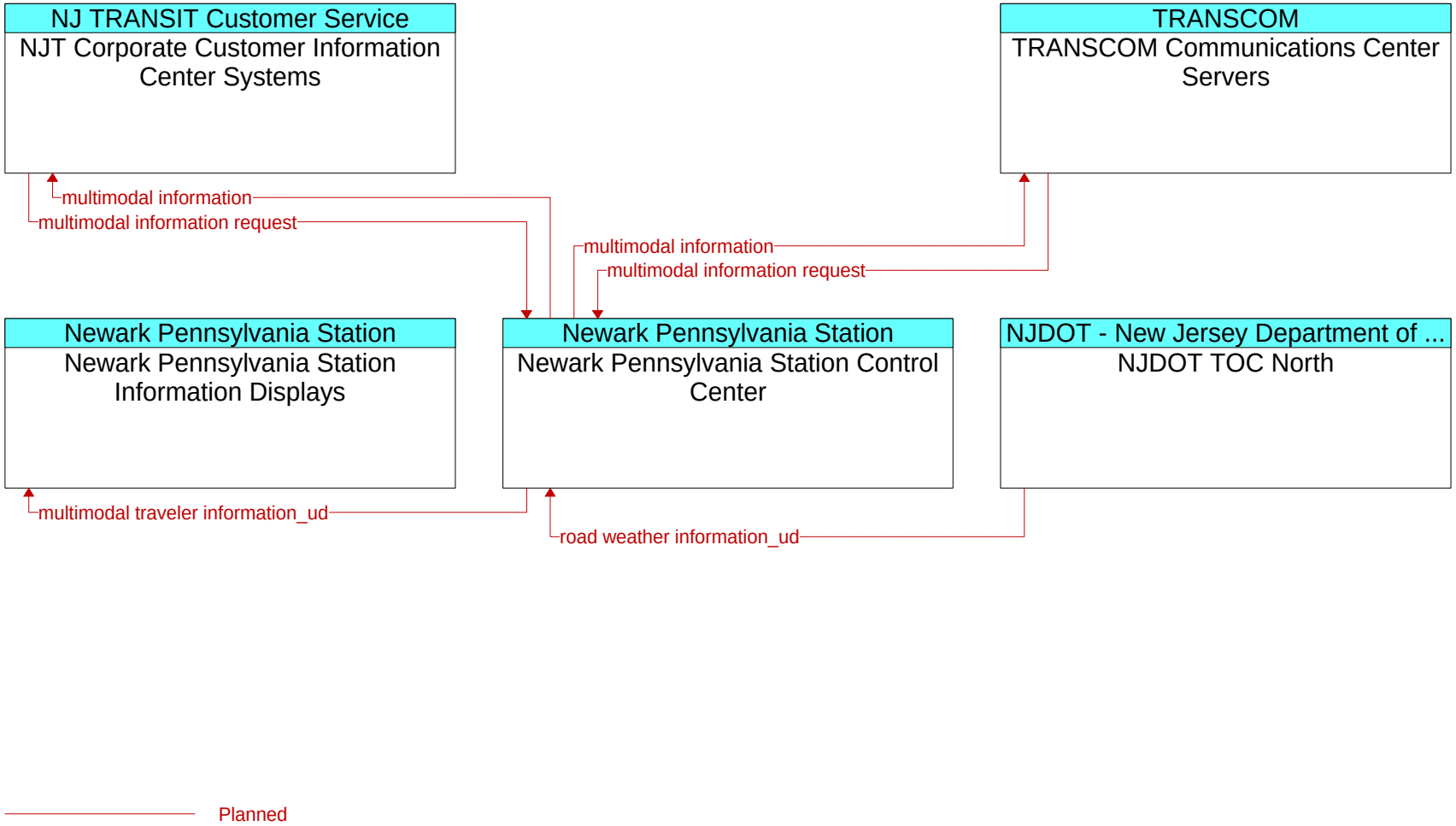
NJ TRANSIT Customer Service
NJT Corporate Customer Information Center Systems
TRANSCOM
TRANSCOM Communications Center Servers
multimodal information
multimodal information request
multimodal information
multimodal information request
Newark Pennsylvania Station
Newark Pennsylvania Station Information Displays
Newark Pennsylvania Station
Newark Pennsylvania Station Control Center
NJDOT - New Jersey Department of ...
NJDOT TOC North
multimodal traveler information_ud
road weather information_ud
Planned