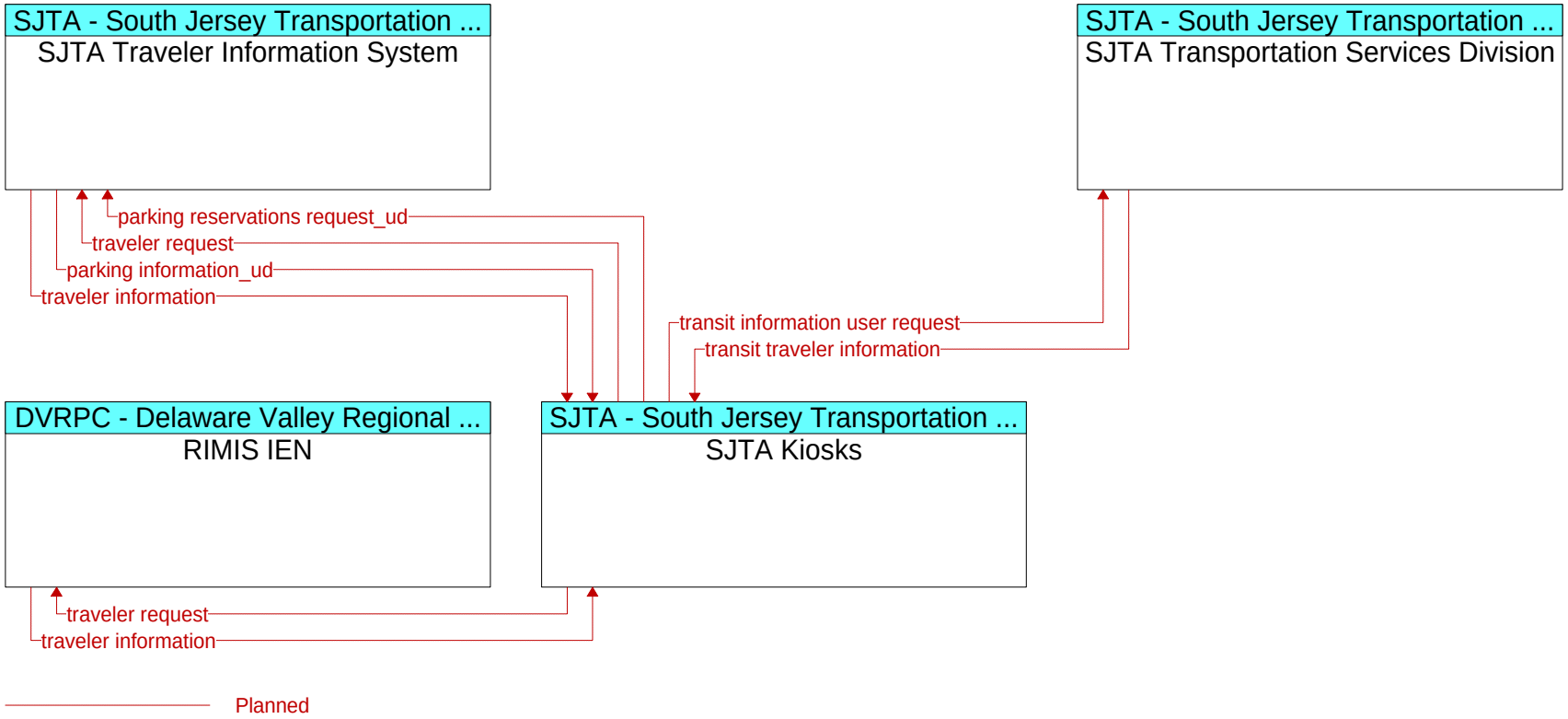
SJTA - South Jersey Transportation ...
SJTA Traveler Information System
SJTA - South Jersey Transportation ...
SJTA Transportation Services Division
parking reservations request_ud
traveler request
parking information_ud
traveler information
transit information user request
transit traveler information
DVRPC - Delaware Valley Regional ...
RIMIS IEN
SJTA - South Jersey Transportation ...
SJTA Kiosks
traveler request
traveler information
Planned