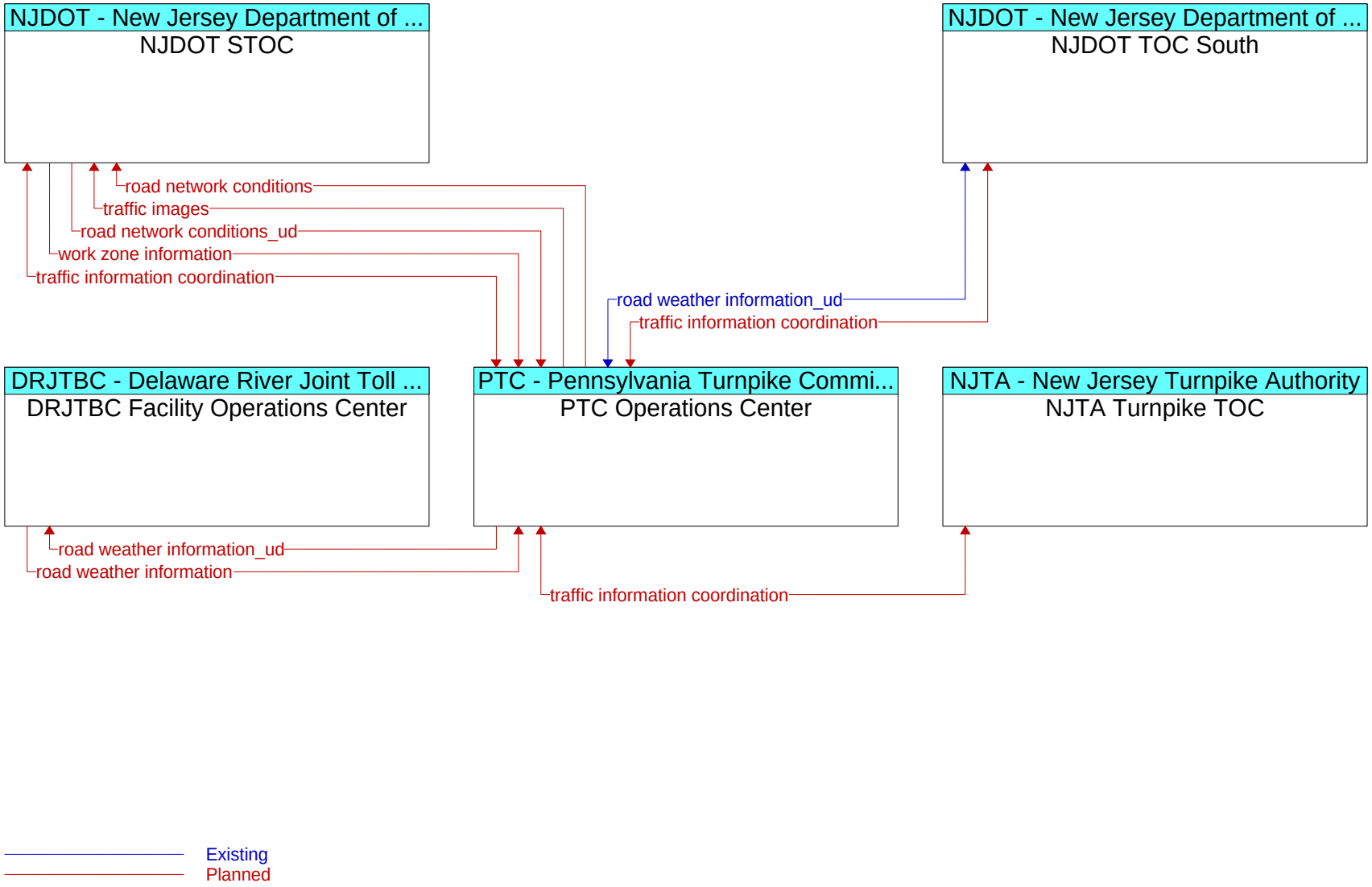
NJDOT - New Jersey Department of ...
NJDOT STOC
NJDOT - New Jersey Department of ...
NJDOT TOC South
road network conditions
traffic images
road network conditions_ud
work zone information
traffic information coordination
road weather information_ud
traffic information coordination
DRJTBC - Delaware River Joint Toll ...
DRJTBC Facility Operations Center
PTC - Pennsylvania Turnpike Commi...
PTC Operations Center
NJTA - New Jersey Turnpike Authority
NJTA Turnpike TOC
road weather information_ud
road weather information
traffic information coordination
Existing
Planned