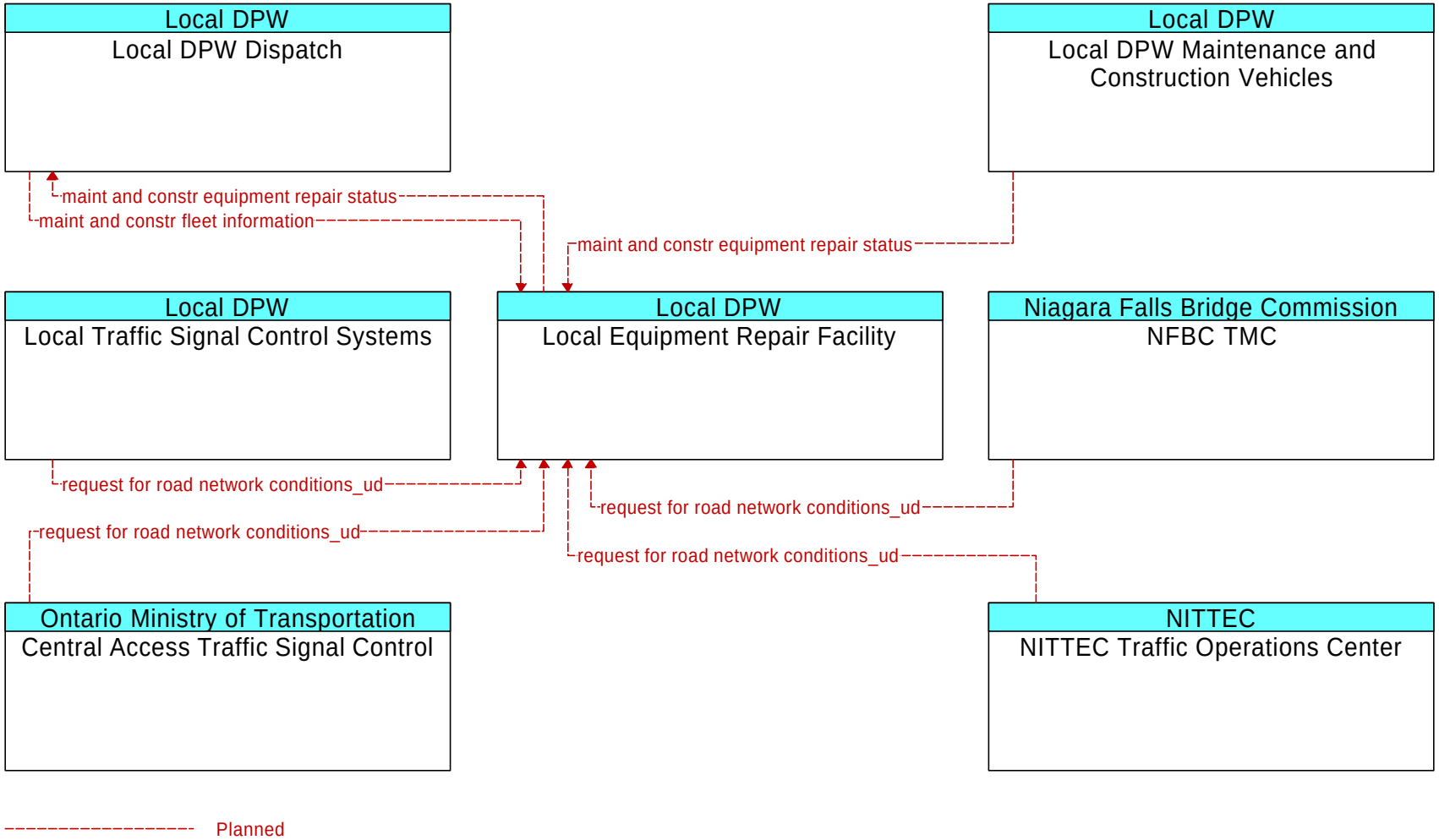
Local DPW
Local DPW Dispatch
Local DPW
Local DPW Maintenance and Construction Vehicles
maint and constr equipment repair status
maint and constr fleet information
maint and constr equipment repair status
Local DPW
Local Traffic Signal Control Systems
Local DPW
Local Equipment Repair Facility
Niagara Falls Bridge Commission
NFBC TMC
request for road network conditions_ud
request for road network conditions_ud
request for road network conditions_ud
request for road network conditions_ud
Ontario Ministry of Transportation
Central Access Traffic Signal Control
NITTEC
NITTEC Traffic Operations Center
Planned